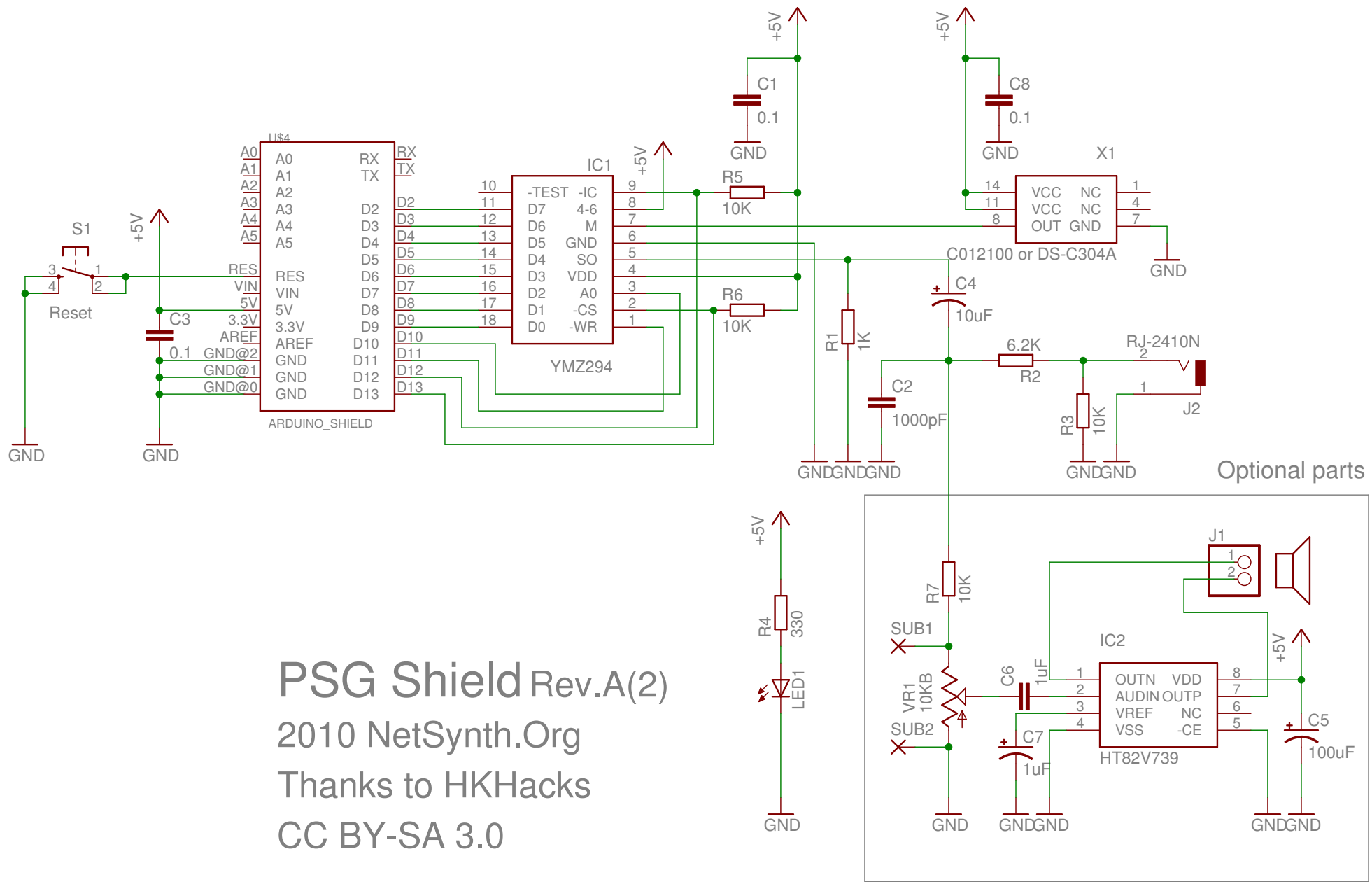

PSG Shield Rev.A(2)

2010 NetSynth.Org

Thanks to HKHacks

CC BY-SA 3.0